UBORA: Euro-African Open Biomedical Engineering e-Platform for Innovation through Education

Phototherapy device to treat infant jaundice

Developers

Martha Mulerwa
Gabriele Fortunato
Elena Crespo
John Gichuru
Rowland Mjumira

Mentors

Paul Niyitanga
Dawit Haile
Wasihun Addi

Clinical needs

- Neonatal jaundice: yellowish discoloration of the white part of the eyes and skin in a newborn baby due to high bilirubin levels.
- It usually occurs because a baby's liver isn't mature enough to get rid of bilirubin in the bloodstream
- It occurs in 50% of term and 80% of preterm infants develop jaundice globally.
- It may lead to complications like seizures, cerebral palsy, or kernicterus (a type of brain damage).

https://www.mayoclinic.org/diseases-conditions/infant-jaundice/symptoms-causes/syc-20373865
https://emedicine.medscape.com/article/1894477-overview

Existing solutions

Two main types of phototherapy:

- Conventional phototherapy: the baby is laid under a halogen or fluorescent lamp with their eyes covered
- Fiber-optic phototherapy: the baby lies on a blanket that incorporates fiber-optic cables

Newer models:

Over head leds: present several advantages:

- Low heat production
- Lower power consumption
- Longer life spans hence much lower prices

Limitations with current designs

- Open structure (cross infection)
- Illumination only over head (Reducing irradiated surface)
- Noise produced from the fan in conventional designs
- Over heating from conventional makes with no temperature sensing.
- Decrease in intensity over time

Product Requirements

- The device should emit blue light (frequency 460-490 nm).
- The amount of the irradiation level has to be between 6-40 µw/cm2/nm.
- The distance should not be greater than 50 cm (20 in) and can be less (down to 10 cm) provided the infant's temperature is monitored. To have a better efficiency the distance should be 10 cm.
- The device should irradiate the hole body to have a better efficiency
- The device must have a temperature control (36.5-37.5 °C)

Device Classification:

- Not invasive
- Active
- Therapeutic
- Temporary use
- It not involves blood or cells

→ Class IIb

ISO standards

- IEC 60601-1:2005+AMD1:2012 CSV - Requirements for electromedical devices
- EN 62304:2006+A1:2015 - How to design and code software for medical devices
- ISO 10993-1:2009 - Biological evaluation of medical devices

Proposed ideas

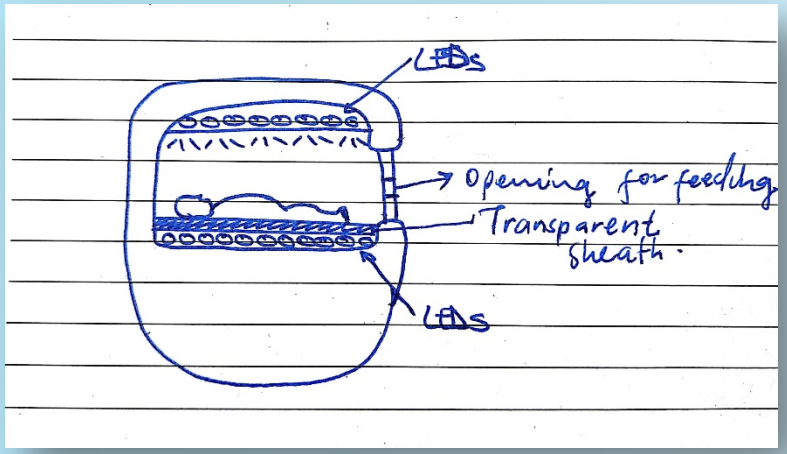

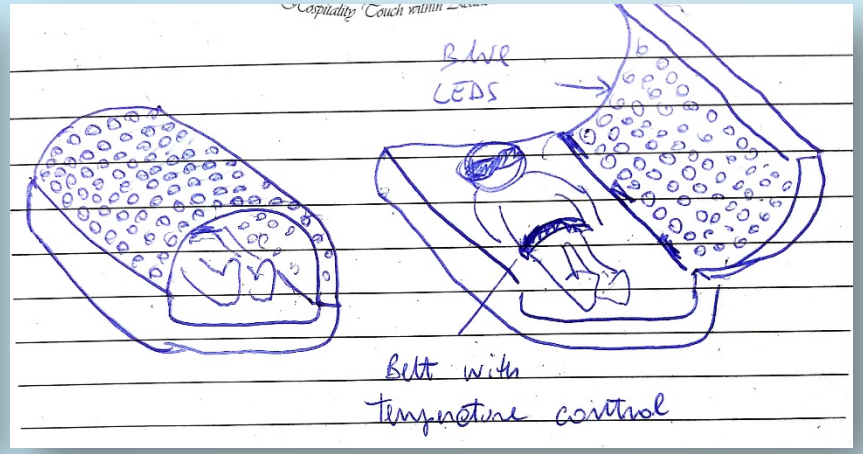

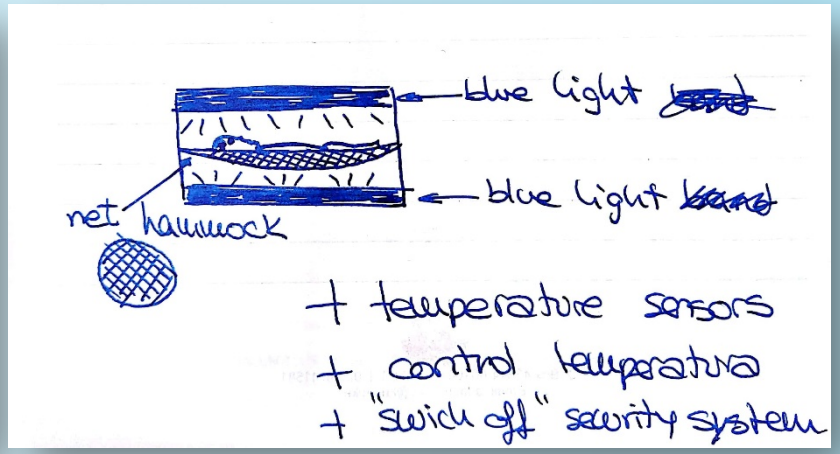

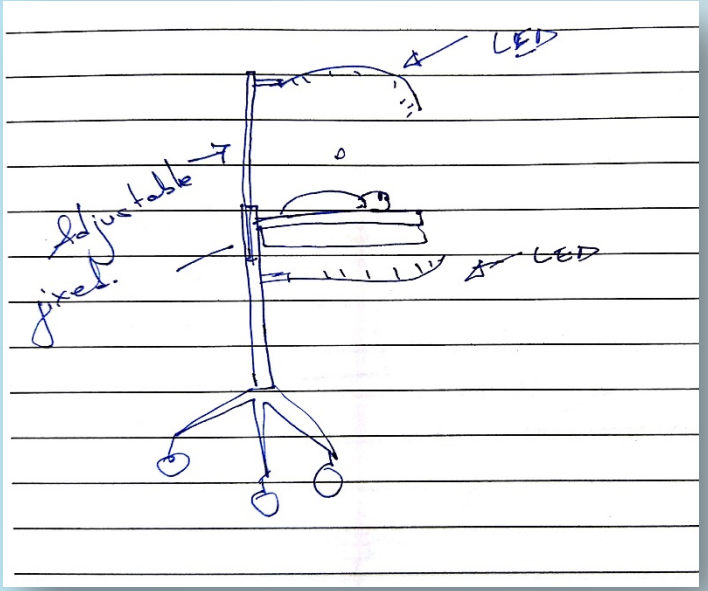

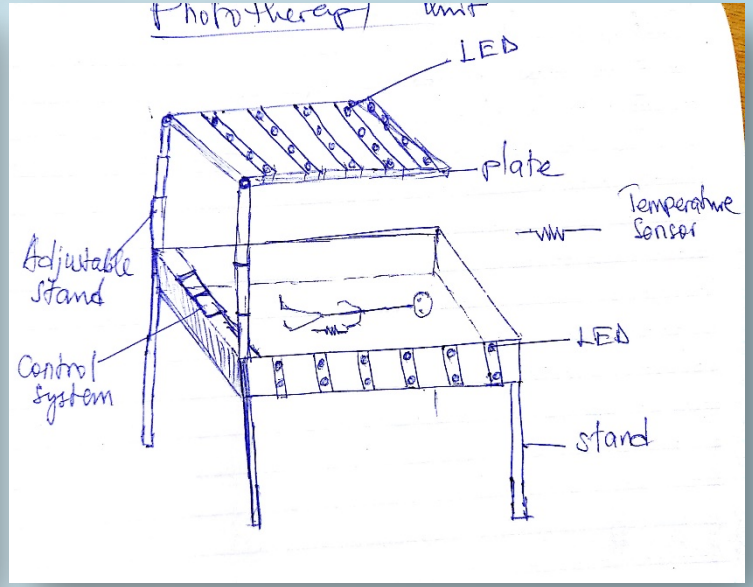

Solution (JAUNDI-CURE)

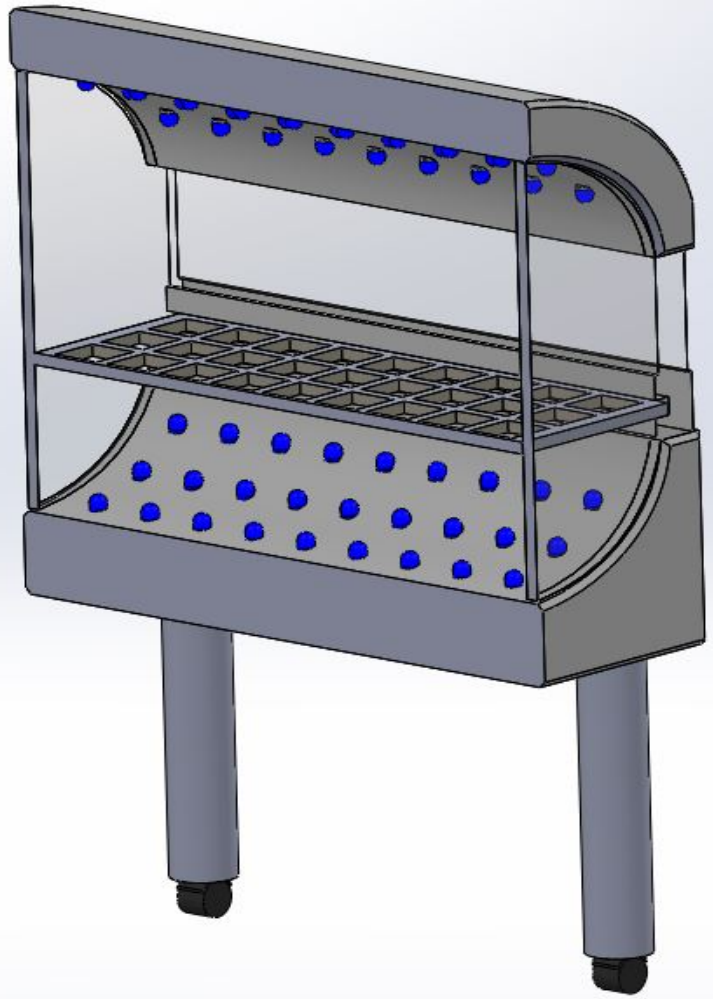

Structured information on the device

- User and environment friendly
- Portable
- Affordable for all economies
- Durable (5years estimated).
- Inbuilt battery for low resource settings. (48hrs)

Prototype design

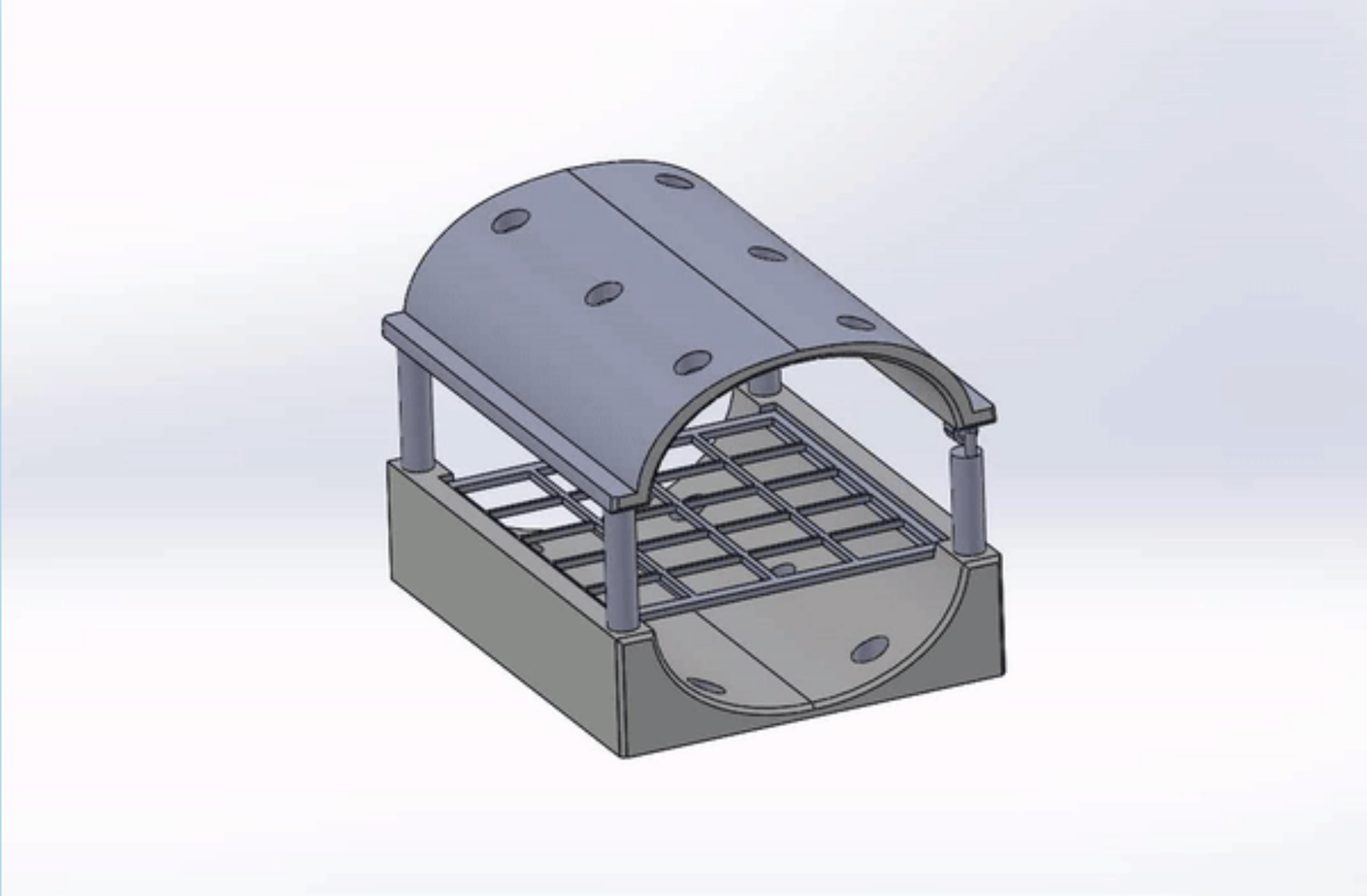

Electronic prototype

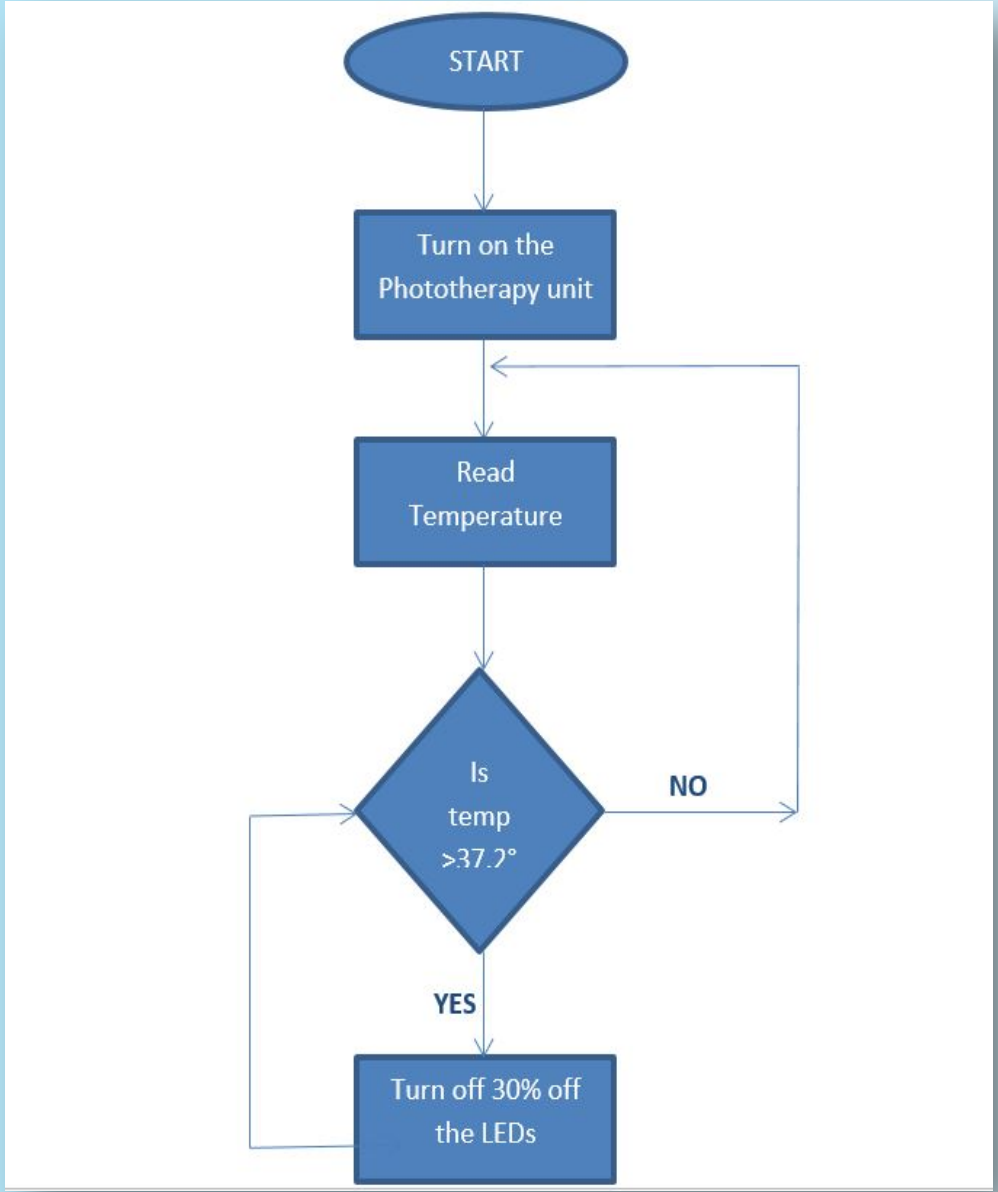

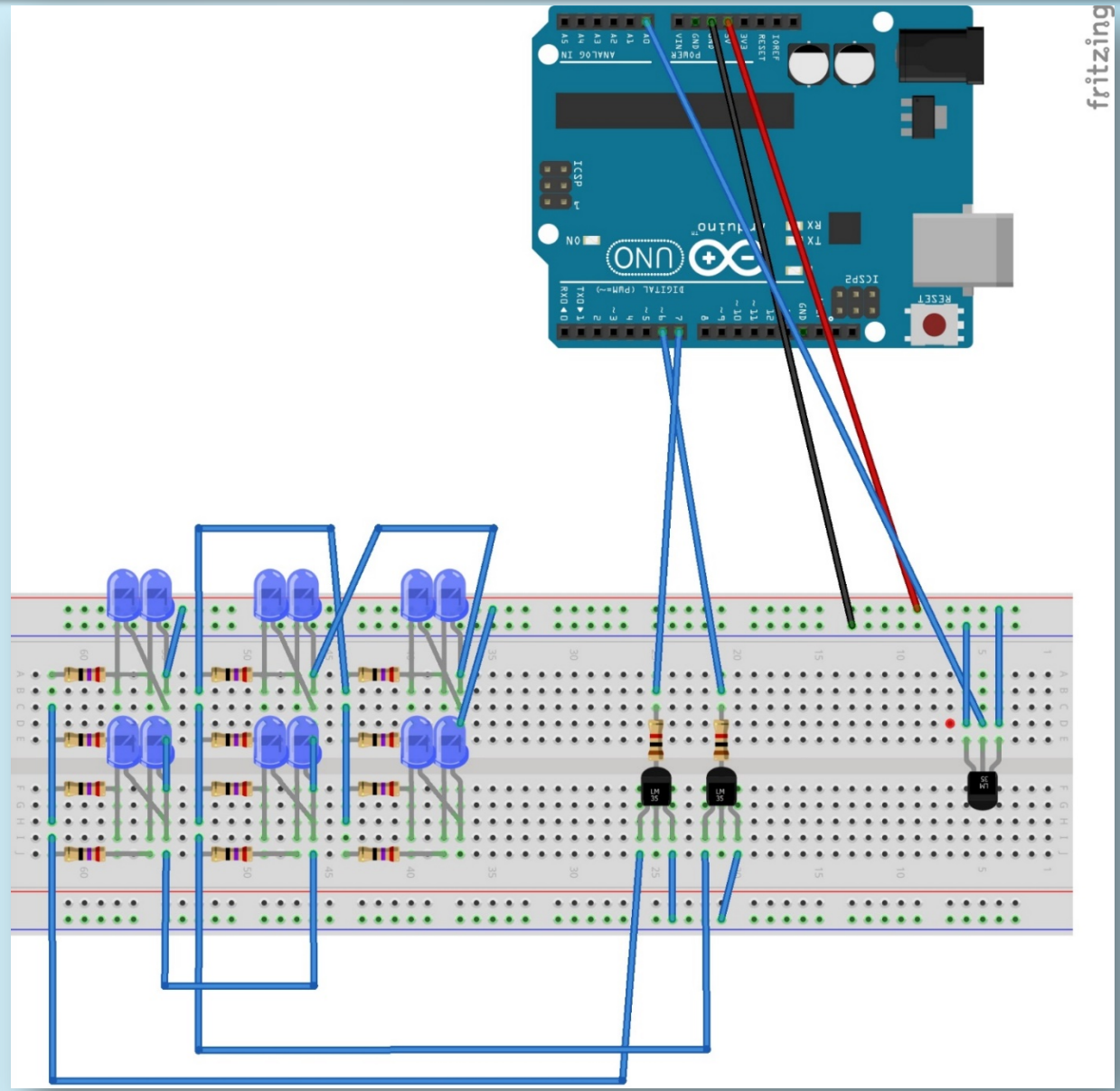


UBORA : Euro-African Open
Biomedical Engineering
e-Platform for Innovation
through Education

Thank you